This .pdf document is bookmarked

Operating Instructions and Parts Manual
Oscillating Spindle Sander
Model JOSS-S

JET
427 New Sanford Road
LaVergne, Tennessee 37086
Ph.: 800-274-6848
www.jettools.com

Part No. M-723950
Revision D 09/2016
ECR 16090811579
Copyright © 2016 JET

1.0 **Warranty and service**

JET warrants every product it sells against manufacturers' defects. If one of our tools needs service or repair, please contact Technical Service by calling 1-800-274-6846, 8AM to 5PM CST, Monday through Friday.

Warranty Period
The general warranty lasts for the time period specified in the literature included with your product or on the official JET branded website.

- JET products carry a limited warranty which varies in duration based upon the product. (See chart below)
- Accessories carry a limited warranty of one year from the date of receipt.
- Consumable items are defined as expendable parts or accessories expected to become inoperable within a reasonable amount of use and are covered by a 90 day limited warranty against manufacturer's defects.

Who is Covered
This warranty covers only the initial purchaser of the product from the date of delivery.

What is Covered
This warranty covers any defects in workmanship or materials subject to the limitations stated below. This warranty does not cover failures due directly or indirectly to misuse, abuse, negligence or accidents, normal wear-and-tear, improper repair, alterations or lack of maintenance. JET woodworking machinery is designed to be used with Wood. Use of these machines in the processing of metal, plastics, or other materials outside recommended guidelines may void the warranty. The exceptions are acrylics and other natural items that are made specifically for wood turning.

Warranty Limitations
Woodworking products with a Five Year Warranty that are used for commercial or industrial purposes default to a Two Year Warranty. Please contact Technical Service at 1-800-274-6846 for further clarification.

How to Get Technical Support
Please contact Technical Service by calling 1-800-274-6846. **Please note that you will be asked to provide proof of initial purchase when calling.** If a product requires further inspection, the Technical Service representative will explain and assist with any additional action needed. JET has Authorized Service Centers located throughout the United States. For the name of an Authorized Service Center in your area call 1-800-274-6846 or use the Service Center Locator on the JET website.

More Information
JET is constantly adding new products. For complete, up-to-date product information, check with your local distributor or visit the JET website.

How State Law Applies
This warranty gives you specific legal rights, subject to applicable state law.

Limitations on This Warranty
JET LIMITS ALL IMPLIED WARRANTIES TO THE PERIOD OF THE LIMITED WARRANTY FOR EACH PRODUCT. EXCEPT AS STATED HEREIN, ANY IMPLIED WARRANTIES OF MERCHANTABILITY AND FITNESS FOR A PARTICULAR PURPOSE ARE EXCLUDED. SOME STATES DO NOT ALLOW LIMITATIONS ON HOW LONG AN IMPLIED WARRANTY LASTS, SO THE ABOVE LIMITATION MAY NOT APPLY TO YOU.
JET SHALL IN NO EVENT BE LIABLE FOR DEATH, INJURIES TO PERSONS OR PROPERTY, OR FOR INCIDENTAL, CONTINGENT, SPECIAL, OR CONSEQUENTIAL DAMAGES ARISING FROM THE USE OF OUR PRODUCTS. SOME STATES DO NOT ALLOW THE EXCLUSION OR LIMITATION OF INCIDENTAL OR CONSEQUENTIAL DAMAGES, SO THE ABOVE LIMITATION OR EXCLUSION MAY NOT APPLY TO YOU.

JET sells through distributors only. The specifications listed in JET printed materials and on official JET website are given as general information and are not binding. JET reserves the right to effect at any time, without prior notice, those alterations to parts, fittings, and accessory equipment which they may deem necessary for any reason whatsoever. JET® branded products are not sold in Canada by JPW Industries, Inc.

Product Listing with Warranty Period

90 Days – Parts; Consumable items
1 Year – Motors; Machine Accessories
2 Year – Metalworking Machinery; Electric Hoists, Electric Hoist Accessories; Woodworking Machinery used for industrial or commercial purposes
5 Year – Woodworking Machinery
Limited Lifetime – JET Parallel clamps; VOLT Series Electric Hoists; Manual Hoists; Manual Hoist Accessories; Shop Tools; Warehouse & Dock products; Hand Tools; Air Tools

NOTE: JET is a division of JPW Industries, Inc. References in this document to JET also apply to JPW Industries, Inc., or any of its successors in interest to the JET brand.

2.0 Table of contents

Section **Page**

1.0 Warranty and service 2
2.0 Table of contents 3
3.0 Safety warnings 4
4.0 About this manual 5
5.0 Specifications 6
6.0 Setup and assembly 7
6.1 Shipping contents 7
6.2 Additional tools required 7
6.3 Unpacking and cleanup 7
6.4 Removal from pallet 8
6.5 Drum and spindle storage 8
6.6 Installing/removing spindles 8
6.7 Installing table insert 9
6.8 Wrench storage 10
6.9 Dust collection 10
7.0 Electrical connections 10
7.1 Grounding instructions 10
7.2 Voltage conversion 11
7.3 Extension cords 11
8.0 Adjustments 11
8.1 Rubber shields 11
8.2 Table tilt for bevel sanding 12
9.0 Operations 12
9.1 Operating guidelines 12
9.2 Safety switch 13
9.3 Safety key 13
10.0 Maintenance 13
10.1 General maintenance 13
10.2 Gearbox lubrication 13
11.0 Troubleshooting JOSS-S Spindle Sander 14
12.0 Replacement Parts 14
12.1.1 JOSS-S Table Assembly – Exploded View 15
12.1.2 JOSS-S Table Assembly – Parts List 16
12.2.1 JOSS-S Cabinet Assembly – Exploded View 18
12.2.2 JOSS-S Cabinet Assembly – Parts List 19
12.3.1 JOSS-S Spindle and Drum Assembly– Exploded View 20
12.3.2 JOSS-S Spindle and Drum Assembly– Parts List 21
13.0 Electrical Connections – JOSS-S Spindle Sander 23

3.0 Safety warnings

Wear eye protection.

Always keep guards in place and in proper operating condition.

This sander is intended to be used with wood and wood products only. Use of this sander and a dust collector with metal products is a potential fire hazard.

Support the workpiece adequately at all times during operation; maintain control of the work at all times.

1. Read and understand the entire owner's manual before attempting assembly or operation.
2. Read and understand the warnings posted on the machine and in this manual. Failure to comply with all of these warnings may cause serious injury.
3. Replace the warning labels if they become obscured or removed.
4. This spindle sander is designed and intended for use by properly trained and experienced personnel only. If you are not familiar with the proper and safe operation of a spindle sander, do not use until proper training and knowledge have been obtained.
5. Do not use this sander for other than its intended use. If used for other purposes, JET disclaims any real or implied warranty and holds itself harmless from any injury that may result from that use.
6. Always wear approved safety glasses/face shields while using this spindle sander. Everyday eyeglasses only have impact resistant lenses; they are *not* safety glasses.
7. Before operating this table saw, remove tie, rings, watches and other jewelry, and roll sleeves up past the elbows. Do not wear loose clothing. Confine long hair. Non-slip footwear or anti-skid floor strips are recommended. Do not wear gloves.
8. Wear ear protectors (plugs or muffs) if noise exceeds safe levels.
9. **WARNING**: Drilling, sawing, sanding or machining wood products generates wood dust and other substances known to the State of California to cause cancer. Avoid inhaling dust generated from wood products or use a dust mask or other safeguards to avoid inhaling dust generated from wood products.
10. Wood products emit chemicals known to the State of California to cause birth defects or other reproductive harm. (California Health and Safety Code Section 25249.6)
11. Do not operate this machine while tired or under the influence of drugs, alcohol or any medication.
12. Make certain switch is in OFF position before connecting machine to power supply.
13. Make certain machine is properly grounded.
14. Make all machine adjustments or maintenance with machine unplugged from the power source.
15. Remove adjusting keys and wrenches. Form a habit of checking to see that keys and adjusting wrenches are removed from the machine before turning it on.
16. Keep safety guards in place at all times when machine is in use. If removed for maintenance purposes, use extreme caution and replace the guards immediately after completion of maintenance.
17. Check damaged parts. Before further use of the machine, a guard or other part that is damaged should be carefully checked to determine that it will operate properly and perform its intended function. Check for alignment of moving parts, binding of moving parts, breakage of parts, mounting and any other conditions that may affect its operation. A guard or other part that is damaged should be properly repaired or replaced.
18. Provide for adequate space surrounding work area and non-glare, overhead lighting.
19. Keep the floor around the machine clean and free of scrap material, oil and grease.
20. Keep visitors a safe distance from the work area. Keep children away.
21. Make your workshop child proof with padlocks, master switches or by removing starter keys.
22. Give your work undivided attention. Looking around, carrying on a conversation and “horse-play” are careless acts that can result in serious injury.
23. Maintain a balanced stance at all times so that you do not fall into the blade or other moving parts. Do not overreach or use excessive force to perform any machine operation.
24. Use the right tool at the correct speed and feed rate. Do not force a tool or attachment to do a job for which it was not designed. The right tool will do the job better and more safely.
25. Use recommended accessories; improper accessories may be hazardous.

26. Maintain tools with care. Follow instructions for lubricating and changing accessories.
27. Use proper extension cord. Make sure your extension cord is in good condition. When using an extension cord, be sure to use one heavy enough to carry the current your product will draw. An undersized cord will cause a drop in line voltage resulting in loss of power and overheating. Table 2 *(see sect. 7.3)* shows correct size to use depending on cord length and nameplate ampere rating. If in doubt, use the next heavier gage. The smaller the gage number, the heavier the cord.
28. Turn off the machine before cleaning. Use a brush or compressed air to remove chips or debris — do not use your hands.
29. Do not stand on the machine. Serious injury could occur if the machine tips over.
30. Never leave the machine running unattended. Turn the power off and do not leave the machine until it comes to a complete stop.
31. Remove loose items and unnecessary work pieces from the area before starting the machine.
32. Don't use in dangerous environment. Don't use power tools in damp or wet location, or expose them to rain. Keep work area well lighted.
33. Hold workpiece down against table firmly at all times.
34. Do not sand workpieces that are too small to be safely supported.
35. Always use appropriate table insert for the selected spindle or drum. Do not sand without a table insert in place.
36. Allow machine to reach operating speed before beginning to sand.
37. Do not operate this sander with a damaged spindle or sanding sleeve.
38. Always feed work against direction of spindle rotation.

Familiarize yourself with the following safety notices used in this manual:

⚠CAUTION This means that if precautions are not heeded, it may result in minor injury and/or possible machine damage.

⚠WARNING This means that if precautions are not heeded, it may result in serious, or possibly even fatal, injury.

SAVE THESE INSTRUCTIONS

4.0 About this manual

This manual is provided by JET, covering the safe operation and maintenance procedures for the JET Model JOSS-S Oscillating Spindle Sander. This manual contains instructions on installation, safety precautions, general operating procedures, maintenance instructions and parts breakdown. Your machine has been designed and constructed to provide consistent, long-term operation if used in accordance with the instructions as set forth in this document.

If there are questions or comments, please contact your local supplier or JET. JET can also be reached at our web site: www.jettools.com.

Retain this manual for future reference. If the machine transfers ownership, the manual should accompany it.

⚠WARNING Read and understand the entire contents of this manual before attempting assembly or operation! Failure to comply may cause serious injury!

5.0 **Specifications**

Model number	**JOSS-S**
Stock number	723950
Motor and electricals:	
Motor type	totally enclosed fan cooled, induction, capacitor start
Horsepower	1 HP (0.75kW)
Phase	single
Voltage	115/230V (prewired 115V)
Cycle	60Hz
Listed FLA (full load amps)	11/5.5
Starting amps	44A
Running amps (no load)	6.5A
Start capacitor	200MFD, 125VAC
Run capacitor	30µF 250VAC
Power transfer	direct drive
Motor speed	1720 RPM
Power cord	6 ft., 3x16 AWG
Power plug installed	15A
Control switch	push-button with paddle stop, safety key
Recommended circuit and fuse/breaker size [1]	15A
Sound emission [2]	80 dB at 100cm; 83 dB at 50cm
Worm gear:	
Gear environment	oil bath
Oil reservoir capacity	1.6 L
Recommended oil type	SAE 90 gear oil
Spindle:	
Oscillations per minute	75
Oscillation length	1-1/2”
Spindle speed (RPM)	1720
Spindle lock	yes
Materials:	
Main table	ground cast iron
Trunnion	steel
Cabinet	steel
Base	cast iron
Sanding drums	rubber
Paint finish	enamel and powder coating
Table:	
Table dimensions	24-1/2”W x 24-1/2”L
Table height from floor	39-3/16” (995mm)
Table tilt	45° front, 15° back
Dimensions:	
Cabinet footprint	15” x 15” (381 x 381 mm)
Overall dimensions w/4”sanding drum	24-1/2”W x 24-1/2”L x 44-3/16”H
Overall dimensions, shipping	29-15/16”W x 27-9/16”L x 44-1/2”H
Dust collection:	
Dust port outside diameter	4” (100mm)
Minimum extraction volume required	300 CFM (27 CMM)
Weights	
Net weight	216 lb (98 kg)
Shipping weight	256 lb (116 kg)

[1] *subject to local/national electrical codes.*

[2] *the specified values are emission levels and are not necessarily to be seen as safe operating levels. As workplace conditions vary, this information is only intended to allow the user to make a better estimation of the hazards and risks involved.*

The specifications in this manual were current at time of publication, but because of our policy of continuous improvement, JET reserves the right to change specifications at any time and without prior notice, without incurring obligations.

6.0 Setup and assembly

The sander main unit requires no assembly. Set-up involves only removing sander from pallet, and installing desired table insert and spindle/sleeve combination.

6.1 Shipping contents

Most of the below items can be found on or inside sander cabinet. Some items are shipped in the small box which accompanies the machine. One table insert comes installed on the table.

Refer to Figure 1.

1 Spindle sander (not shown)
6 Table inserts:
for 4” rubber drum (at 90°) – A
for 2” rubber drum (at 90°) – B
for 3/8” spindle (at 90°) – C
for 1/4”-to-3/4” spindle (at tilt) – D
for 1”,1-1/2”,2” rubber drum (at tilt) – E
for 3” and 4” rubber drum (at tilt) – F
1 Rubber drum with sleeve 4” – G
1 Rubber drum with sleeve 3” – H
1 Rubber drum with sleeve 2” – J
1 Rubber drum with sleeve 1-1/2” – K
1 Rubber drum with sleeve 1” – L
1 3/4" sleeve – M
1 3/4" Spindle – N
1 5/8" Spindle with sleeve – O
1 1/2 ” Spindle with sleeve – P
1 3/8" Spindle with sleeve – R
1 1/4” Spindle with sleeve – S
1 Spindle hex nut – T
1 Combination wrench (with magnet strip) – U
1 Hex wrench 3mm, and magnet strip – V

Note: All provided sanding sleeves are 100 grit. Additional grits are available – see parts breakdown.

6.2 Additional tools required

Ratchet wrench with socket set (or adjustable wrench)
Cross-point (Phillips) screwdriver
Machinist square
Straight edge

6.3 Unpacking and cleanup

Inspect all contents from shipping carton, including parts inside cabinet (accessed through the side door). Report any damage or part shortages to your distributor.

Exposed metal surfaces, such as table surface, have been given a protective coating at the factory. This coating should be removed with a soft cloth moistened with solvent, such as mineral spirits. Do not use solvents with low flash points, or allow solvents near plastic or rubber parts. Do not use an abrasive pad as it may scratch exposed surfaces.

Periodically apply a light coat of paste wax or other protectant to the table top to prevent rusting.

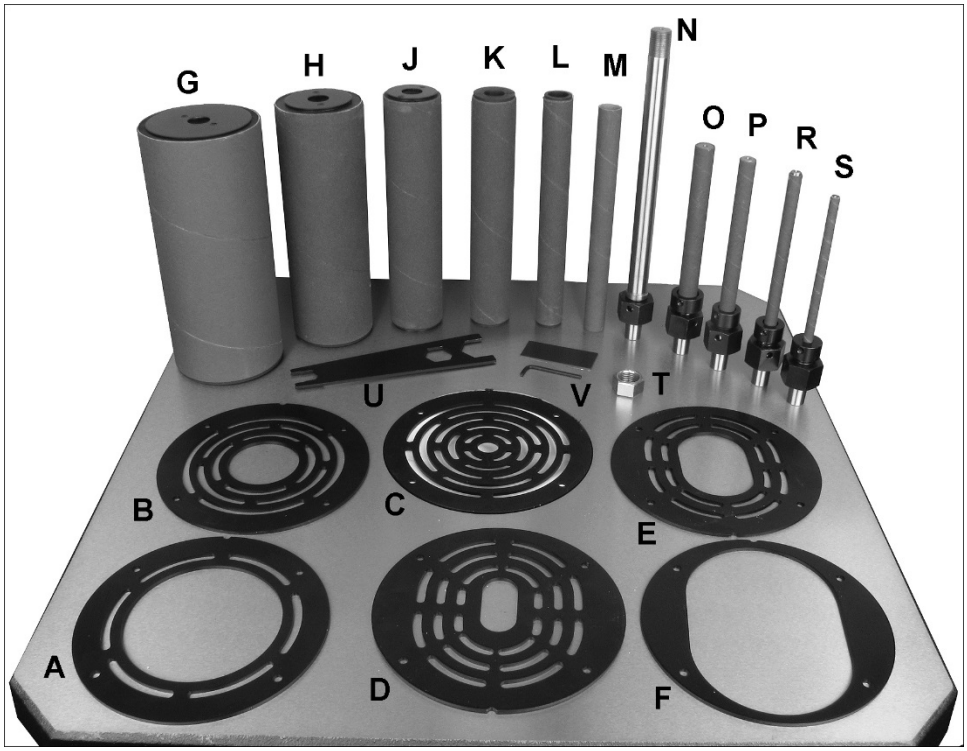

Figure 1

6.4 Removal from pallet

To remove sander from pallet:

1. Open cabinet door and remove accessories.
2. Use ratchet wrench with extended socket to unscrew two bolts securing machine to pallet (Figure 2).
3. Move sander off pallet, with help from an assistant.

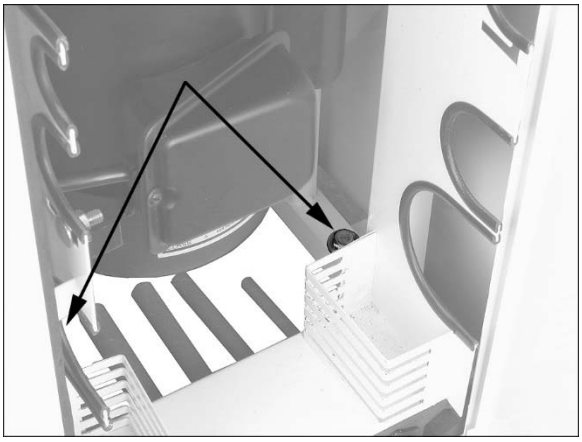

Figure 2: removal from pallet

6.5 Drum and spindle storage

Keep drums, spindles and table inserts protected by storing them in cabinet (Figure 3). To open door, lift bottom of latch and rotate counterclockwise 90 degrees (Figure 4). Reverse procedure to close cabinet door.

Figure 3: cabinet storage

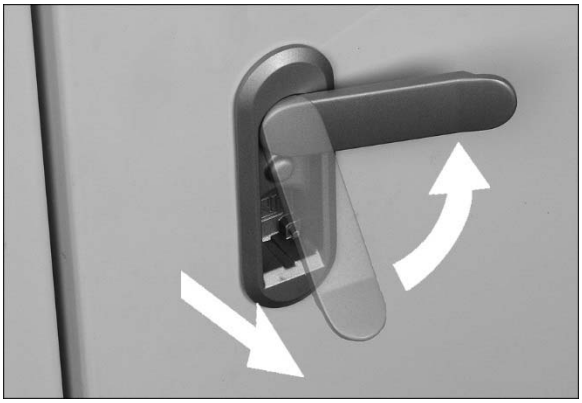

Figure 4: door latch

6.6 Installing/removing spindles

WARNING Disconnect sander from power source when installing or removing sanding assemblies. Failure to comply may cause serious injury.

Open front shield (see *sect. 8.1 Rubber Shields*).

Thoroughly clean tapered area (A, Figure 5) on all spindle assemblies before installing. Also clean mating shaft on sander.

Remove table insert if installed.

Table may be tilted 15° backward to improve access (see *sect. 8.2*.)

6.6.1 Small sleeve spindles

Refer to Figure 5.

1. Slide sanding sleeve (B) completely onto spindle, ensuring that it slides into collar (C).
2. Tighten set screw on collar (C) with provided 3mm hex wrench. Do not overtighten.
3. Pull on sleeve to ensure it is secure.
4. Position spindle taper (A) into main shaft and hold.
5. Rotate nut (D) clockwise by hand, as viewed from above. Continue rotating nut until spindle seats (stops turning with nut), then continue rotating nut until it is hand-tight.
6. Push in and hold spindle lock (E). Note: Rotate spindle to ensure proper engagement.
7. Use provided combination wrench to tighten nut further. Do not overtighten.
8. Release spindle lock. Make sure it retracts by rotating spindle slightly.

   CAUTION Make sure spindle lock has fully disengaged before turning on sander, or damage to motor may result.

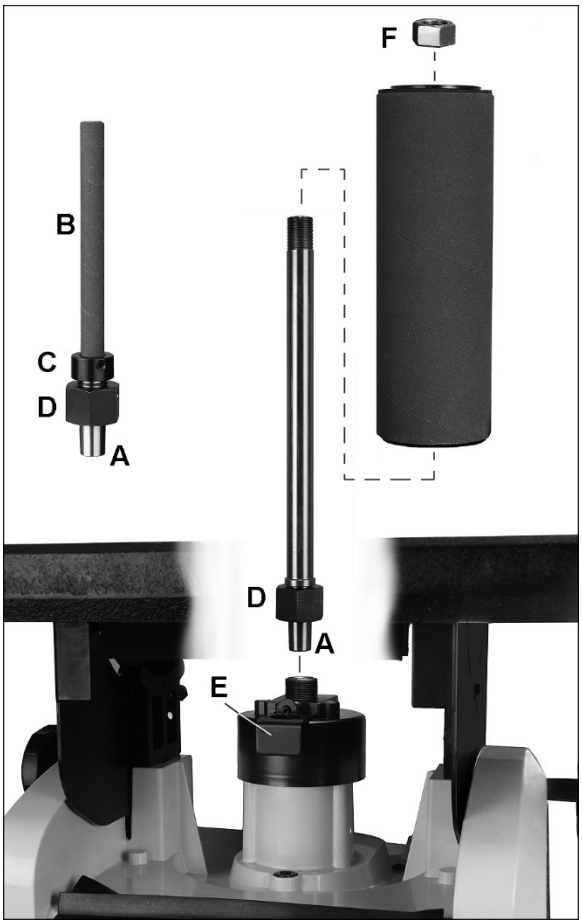

Figure 5: Spindle and drum mounting

6.6.2 Rubber drums

Refer to Figure 5.

1. Position spindle taper (A) into main shaft and hold.
2. Rotate nut (D) clockwise by hand, as viewed from above. Rotate nut until spindle seats (stops turning with nut), then continue rotating nut until it tightens.
3. Push and hold spindle lock (E). Note: Rotate spindle to ensure proper engagement.
4. Use provided combination wrench to tighten nut further. Do not overtighten.
5. Slide sanding sleeve completely onto drum until its bottom edge is even with drum.
6. Slide drum/sleeve assembly down fully onto spindle.
7. Push and hold spindle lock (E).
8. Install hex nut (F) onto spindle threads and tighten clockwise (as viewed from above) with provided combination wrench.
9. Pull on sleeve to ensure it is secure. If it slides, tighten nut (F) a bit further. Do not overtighten.
10. Release spindle lock (E). Make sure it retracts by rotating spindle slightly.

⚠CAUTION Make sure spindle lock has fully disengaged from spindle before turning on sander, or damage to motor may result.

To remove a spindle, reverse the above procedure(s).

6.7 Installing table insert

Tools required:
cross-point screwdriver
straight edge

⚠CAUTION Failure to use proper table insert with corresponding spindle/drum may result in personal injury and/or damage to workpiece.

Table inserts are round or oblong. Table 1 identifies purpose of each.

Insert	Used with spindle (diameter)	Table angle
	3” and 4” drum	0 deg.
	1/2, 5/8, 3/4, 1, 1-1/2, 2” drum	0 deg.
	1/4” TO 3/8”	0 deg.
	1/4, 3/8,1/2,5/8 and 3/4"	Up to 45 deg.
	1, 1-1/2, 2” drum	Up to 45 deg.
	3” and 4” drum	Up to 45 deg.

Table 1: Table insert identification

1. Position insert into table, so that notch is captured by the pin (A, Figure 6).
2. Place straight edge over insert and table. If gaps appear between straight edge and insert, turn screw(s) to raise or lower insert. Reposition straight edge at right angle to check level in both directions.

Note: Leveling one insert is sufficient as all inserts are same thickness.

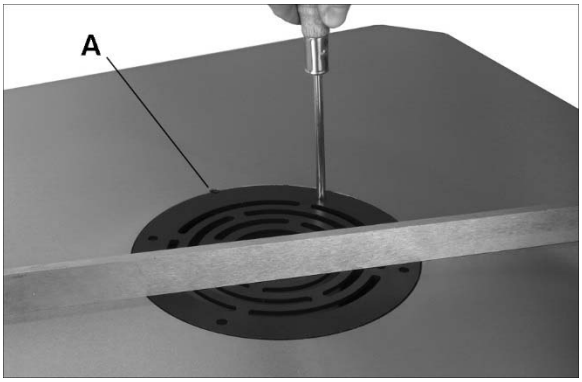

Figure 6: mounting table insert

6.8 Wrench storage

The provided combination wrench has a magnetic strip, and can be placed against any metal surface.

Expose the adhesive on the additional magnetic strip and apply anywhere on the cabinet surface. The hex key can be stored against it.

6.9 Dust collection

A sander produces a significant volume of wood dust; the use of a dust collection system is strongly recommended. It will help keep the shop clean, as well as reduce potential health hazards caused by inhalation of wood dust. The collector should have a capacity sufficient for this size machine; minimum 300 CFM is recommended.

JET has a line of dust collection systems available; see your dealer or visit our website listed on the cover.

Connect the hose of your dust collection system to the 4-inch dust port (Figure 7) at rear of sander. Secure tightly with a hose clamp.

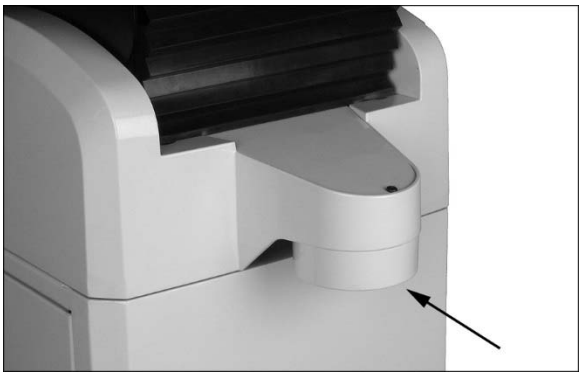

Figure 7

7.0 Electrical connections

The JOSS-S sander is rated at 115/230V power, and is pre-wired for 115 volt. The sander comes with a plug designed for use on a circuit with a *grounded outlet* that looks like the one pictured in **A**, Figure 8.

Before connecting to power source, be sure switch is in *off* position.

It is recommended that the JOSS-S sander be connected to a dedicated 15 amp circuit with a 15 amp circuit breaker or time-delay fuse marked “D”. **Local codes take precedence over recommendations.**

7.1 Grounding instructions

1. All Grounded, Cord-connected Tools:

In the event of a malfunction or breakdown, grounding provides a path of least resistance for electric current to reduce the risk of electric shock. This tool is equipped with an electric cord having an equipment-grounding conductor and a grounding plug. The plug must be plugged into a matching outlet that is properly installed and grounded in accordance with all local codes and ordinances.

Do not modify the plug provided - if it will not fit the outlet, have the proper outlet installed by a qualified electrician.

Improper connection of the equipment-grounding conductor can result in a risk of electric shock. The conductor with insulation having an outer surface that is green with or without yellow stripes is the equipment-grounding conductor. If repair or replacement of the electric cord or plug is necessary, do not connect the equipment-grounding conductor to a live terminal.

⚠WARNING Check with a qualified electrician or service personnel if the grounding instructions are not completely understood, or if in doubt as to whether the tool is properly grounded. Failure to comply may cause serious or fatal injury.

Use only 3-wire extension cords that have 3-prong grounding plugs and 3-pole receptacles that accept the tool's plug.

Repair or replace damaged or worn cord immediately.

*2. Grounded, cord-connected tools intended for use on a supply circuit having a nominal rating **less than 150** volts:*

This tool is intended for use on a circuit that has an outlet that looks like the one illustrated in **A,** Figure 8. An adapter, shown in **B** and **C**, may be used to connect this plug to a 2-pole receptacle as shown in **B** if a properly grounded outlet is not available.

The temporary adapter should be used only until a properly grounded outlet can be installed by a qualified electrician. *This adapter is not permitted in Canada.* The green-colored rigid ear, lug, and the like, extending from the adapter must be connected to a permanent ground such as a properly grounded outlet box.

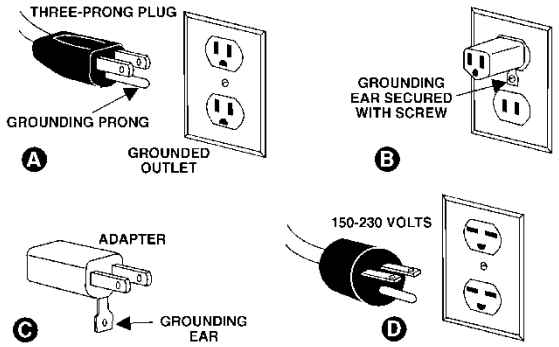

Figure 8

3. Grounded, cord-connected tools intended for use on a supply circuit having a nominal rating between ***150 - 250 volts****, inclusive:*

This tool is intended for use on a circuit that has an outlet that looks like the one illustrated in **D,** Figure 8. The tool has a grounding plug that looks like the plug illustrated in **D**. Make sure the tool is connected to an outlet having the same configuration as the plug. No adapter is available or should be used with this tool. If the tool must be reconnected for use on a different type of electric circuit, the reconnection should be made by qualified service personnel; and after reconnection, the tool should comply with all local codes and ordinances.

7.2 Voltage conversion

To switch incoming power leads for 230 volt operation, follow wiring diagram on inside cover of motor junction box. A similar diagram is printed in *sect. 13*. (In case of discrepancy, diagram on machine takes precedence.)

The power cord plug must be replaced with a UL/CSA listed plug rated for 230V.

7.3 Extension cords

The use of extension cords is discouraged; try to position machines within reach of the receptacle. If an extension cord is necessary, be sure to use one heavy enough to carry the current your product will draw. An undersized cord will cause a drop in line voltage resulting in loss of power and overheating. Table 2 shows correct size to use depending on cord length and nameplate ampere rating. If in doubt, use the next heavier gauge. The smaller the gauge number, the heavier the cord.

Ampere Rating		Volts	Total length of cord in feet			
More Than	Not More Than	120 240	25 50	50 100	100 200	150 300
			AWG			
00	06		18	16	16	14
06	10		18	16	14	12
10	12		16	16	14	12
12	16		14	12	Not Recommended	

Extension Cord Recommendations
Table 2

8.0 Adjustments

WARNING Disconnect sander from power source before making adjustments.

8.1 Rubber shields

Refer to Figures 9 and 10.

Front and rear rubber shields are connected at top by hook-and-loop fasteners. Peel off top of shield to access spindle area (Figure 9).

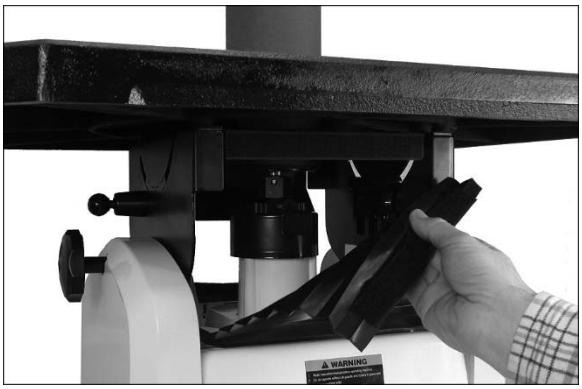

Figure 9: front shield

IMPORTANT: Before tilting table to maximum degree forward, move top of shield from upper position (A) to lower position (B).

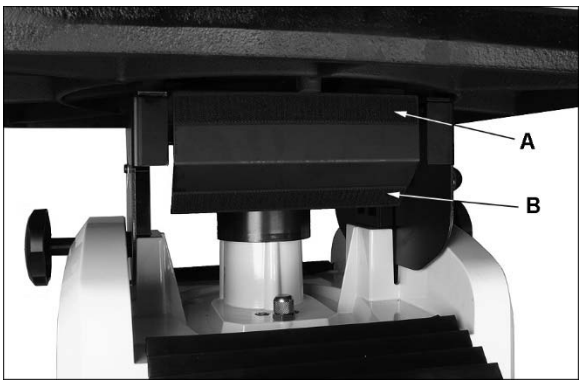

Figure 10: rear shield

8.2 Table tilt for bevel sanding

Refer to Figures 11 and 12.

1. Loosen both knobs (A, Figure 11) counterclockwise.

To tilt forward (45-degree maximum):

2. Move table by hand to desired angle shown on scale (B). Scale is marked in 5-degree increments.
3. Retighten knobs (A).

To tilt backward (15-degree maximum):

4. Pull out pin (C) and rotate it 90-degrees to keep it disengaged.
5. Tilt table to desired position, and tighten knobs (A).

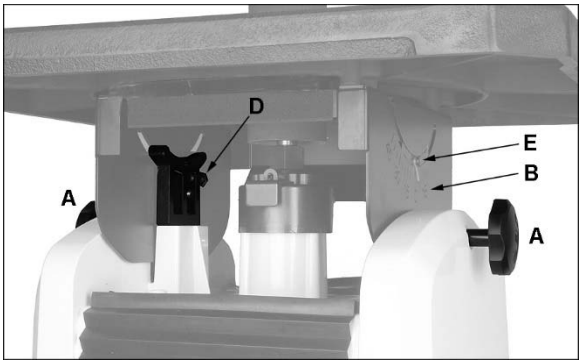

Figure 11: table tilt

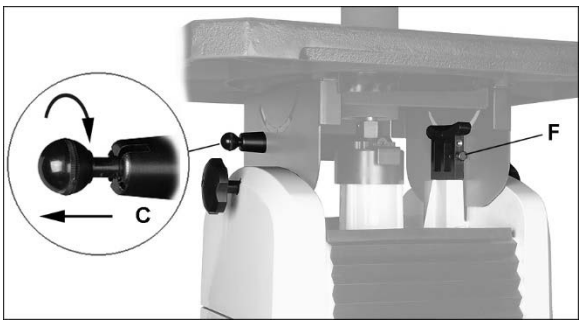

Figure 12: table tilt

8.2.1 Setting 90- and 45-degree stops

Tools required:
machinist square
13mm wrench

Refer to Figures 11 through 13.

1. Make sure table insert has been leveled with table *(sect. 6.7).*
2. Make sure pin (C) is re-engaged to contact stop screw. Position table at zero (90-degrees) against stop screw (D).
3. Place square on table and against front of drum or spindle (Figure 13).
4. Rotate screw (D) until square sits flush against table and spindle/drum.
5. If needed, loosen pointer (E) and align it with zero degree mark.
6. Tilt table to 45-degrees and check accuracy of 45-degree stop screw (F). Adjust as needed.

Note: The above procedure is sufficient for most wood sanding operations. If greater angle precision is needed, remove insert and use a larger square flush against a bare spindle and table surface to set 90-degree stop.

Figure 13: setting tilt stop

9.0 Operations

9.1 Operating guidelines

1. Select spindle that is slightly smaller than curve to be sanded.
2. Make sure spindle is properly secured on main shaft.
3. Use table insert that has smallest opening possible without contacting sanding sleeve.
4. Loosen both table handles and position table at desired angle. Tighten both table handles before operating.
5. Turn on sander and allow it to reach full speed before starting work.
6. Hold workpiece firmly and against table at all times.
7. For best results, keep workpiece moving against spindle.
8. When table is at zero (90-degrees), workpiece may approach sanding sleeve from any part of table. When table is tilted, use table area in front of spindle.

9. Sanding sleeve life may be prolonged by reversing it on the spindle to make use of opposite end.

⚠CAUTION Keep fingers clear of sanding sleeve and table insert hole during operation.

9.2 Safety switch

Refer to Figure 14.

To start sander, push green button (A).

To stop sander, push red button (B).

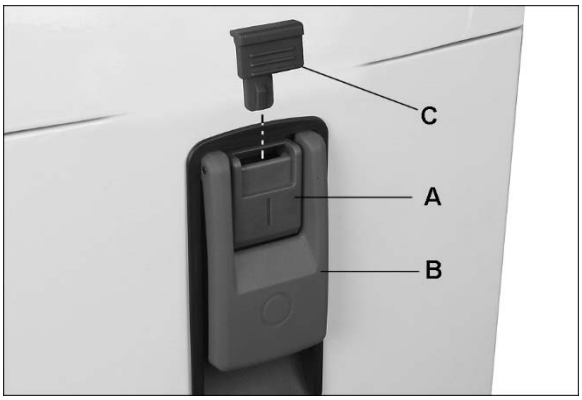

Figure 14

⚠WARNING If power to the sander is interrupted, the machine will restart immediately once power is restored, unless the red stop button has been pushed.

9.3 Safety key

The switch has a safety feature that prevents unauthorized or accidental starting of the sander.

With sander turned off, slide safety key (C, Figure 14) upward and remove it from switch. Store in a safe place. This piece must be re-inserted before sander can operate.

10.0 Maintenance

⚠WARNING Always disconnect power to the machine before performing maintenance. Failure to do this may result in serious personal injury.

10.1 General maintenance

Clean the sander after each use. Vacuum any residual dust inside the cabinet and around spindle area.

Periodically apply a light coat of paste wax or other protectant to the table surface to prevent rust.

All bearings are permanently lubricated and sealed; no further lubrication required.

10.2 Gearbox lubrication

Periodically check oil level at the sight glass (D, Figure 15) – oil should be mid-level in the glass.

Use good quality SAE 90 gear oil.

Completely drain and refill after every 800 hours of use. Oil capacity is 1.6 liters.

To drain and refill gearbox:

1. Remove accessories from inside cabinet to access drain plug.
2. Remove drain plug (E, Figure 15) with 14mm wrench. Dispose of used oil properly. Reinstall drain plug.
3. Open rear shield, and clean area around oil cap. Unscrew oil cap (F, Figure 16) by hand, and remove spring.
4. Fill reservoir until oil level is at center of sight glass.
5. Reinstall spring and oil cap.

Figure 15

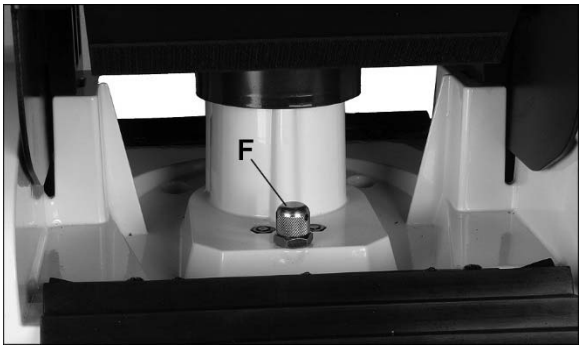

Figure 16

11.0 **Troubleshooting JOSS-S Spindle Sander**

Symptom	Possible Cause	Correction
Sander will not start.	Sander unplugged from wall or motor.	Check all plug connections.
	Fuse blown, or circuit breaker tripped in service panel.	Replace fuse, or reset circuit breaker.
	Cord damaged.	Replace cord.
	Starting capacitor bad.	Replace starting capacitor.
Sanding drum does not come up to speed.	Extension cord too light or too long.	Replace with adequate size and length cord.
	Low current.	Contact a qualified electrician.
Machine vibrates excessively.	Stand or base on uneven surface.	Adjust stand or base so that it rests evenly on the floor.
	Bearings worn.	Replace bearings.
Sanded edge not square.	Table not square to sanding drum.	Use a square to adjust table to sanding drum.
Sanding marks on wood.	Wrong grit sanding sleeve.	Use coarser grit for stock removal and fine grit for finish sanding.
	Feed pressure too great.	Do not force workpiece against spindle or drum.

Table 3

12.0 **Replacement Parts**

Replacement parts are listed on the following pages. To order parts or reach our service department, call 1-800-274-6848 Monday through Friday, 8:00 a.m. to 5:00 p.m. CST. Having the Model Number and Serial Number of your machine available when you call will allow us to serve you quickly and accurately.

12.1.1 **JOSS-S Table Assembly – Exploded View**

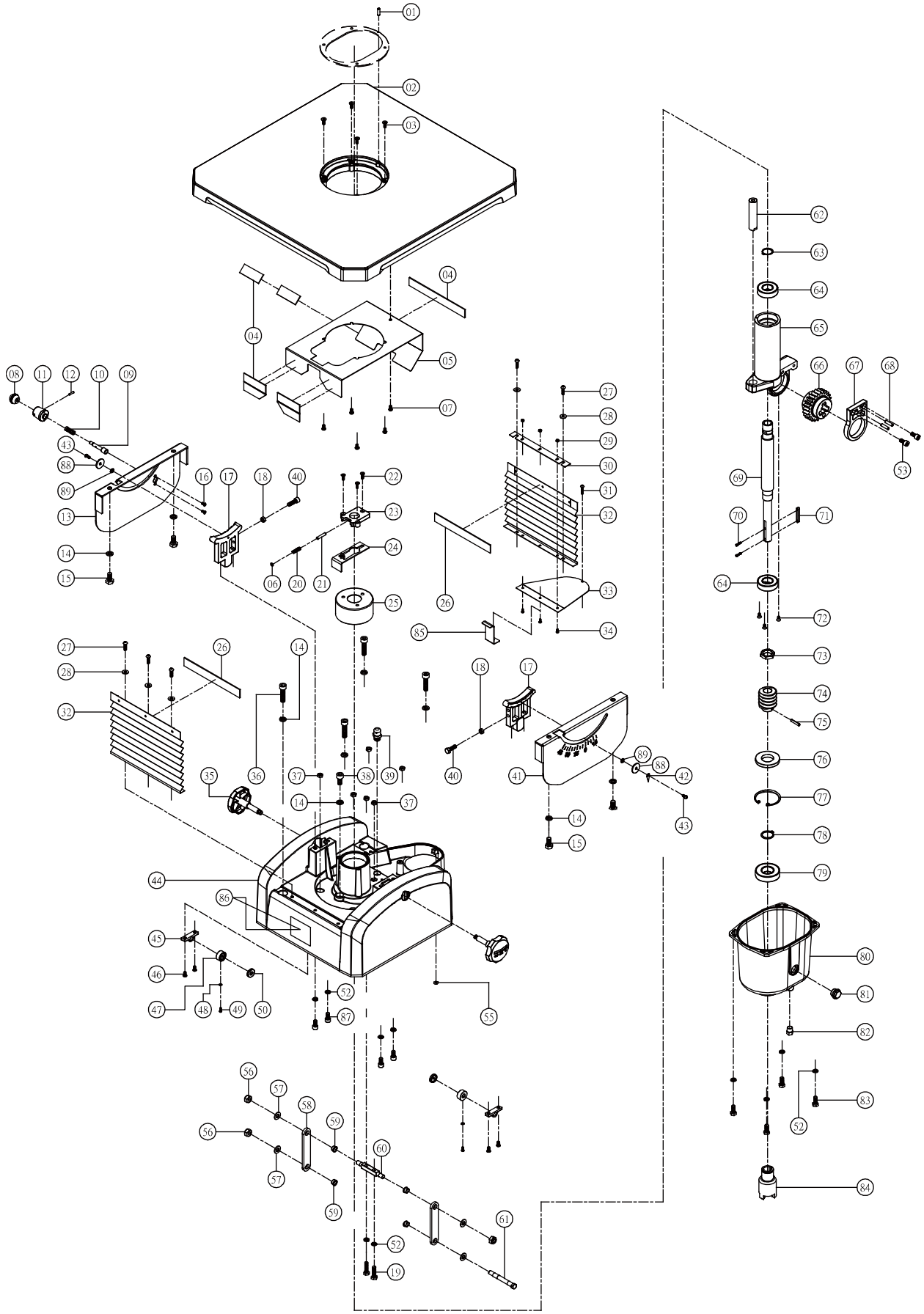

12.1.2 **JOSS-S Table Assembly – Parts List**

Index No	Part No	Description	Size	Qty
1	SBR30M-62	Spring Pin	5*20L	1
2	JOSS-S-102	Table		1
3	JOSS-S-103	Phillips Flat Head Screw	M6*1.0P*15L	4
4	JOSS-S-104	Hook-and-Loop Fastener (Male) Set		1
5	JOSS-S-105	Rubber Shield Holder		1
6	TS-1550031	Flat Washer	5.5*8*1T	1
7	JOSS-S-107	Phillips Round Head Screw	M6*1.0P*10L	5
8	JOSS-S-108	Knob		1
9	JOSS-S-109	Stop Pin		1
10	JOSS-S-110	Compression Spring		1
11	JOSS-S-111	Stop Pin Housing		1
12	40345	Spring Pin	3*16L	1
13	JOSS-S-113	Left Table Trunnion		1
14	TS-2361101	Lock Washer	M10	9
15	TS-1491021	Hex Cap Screw	M10*1.5P*20L	4
16	TS-1512011	Socket Head Flat Screw	M4*0.7P*10L	2
17	JOSS-S-117	Guide Block		2
18	TS-1540061	Hex Nut	M8*1.25P	2
19	TS-1490051	Hex Cap Screw	M8*1.25P*30L	3
20	JOSS-S-120	Compression Spring		1
21	60B-277	Spring Pin	6*36L	1
22	F010958	Phillips Flat Head Screw	M5*0.8P*20L	3
23	JOSS-S-123	Spindle Lock Seat		1
24	JOSS-S-124	Spindle Lock		1
25	JOSS-S-125	Cap		1
26	JOSS-S-126	Hook-and-Loop Fastener (Female)		2
27	JOSS-S-127	Phillips Round Head Screw	M6*1.0P*20L	5
28	TS-0692061	Flat Washer	6.4*16*1.6T	5
29	TS-1540021	Hex Nut	M4*0.7P	3
30	JOSS-S-130	Rubber Shield Holder		1
31	TS-2285202	Phillips Round Head Screw	M5*0.8P*20L	1
32	JOSS-S-132	Rubber Shield		2
33	JOSS-S-133	Dust Chute Cover		1
34	TS-2284082	Phillips Round Head Screw	M4*0.7P*8L	3
35	JOSS-S-135	Knob		2
36	TS-1505061	Socket Head Cap Screw	M10*1.5P*40L	4
37	TS-1540061	Hex Nut	M8*1.25P	6
38	TS-1505021	Socket Head Cap Screw	M10*1.5P*20L	1
39	JOSS-S-139	Oil Filler Plug		1
40	TS-1504051	Socket Head Cap Screw	M8*1.25P*25L	2
41	JOSS-S-141	Right Table Trunnion		1
42	JOSS-S-142	Pointer		1
43	F001208	Phillips Round Head Screw	M5*0.8P*8L	2
44	JOSS-S-144	Quill Housing		1
45	JOSS-S-145	Knob Seat		2
46	JOSS-S-146	Self Tapping Screw	1/4"*5/8"L	4
47	JOSS-S-147A	Collar		2
48	TS-2361041	Lock Washer	M4	2
49	TS-2284102	Phillips Round Head Screw	M4*0.7P*10L	2
50	JOSS-S-150A	Rubber Pad		2
52	TS-2361081	Lock Washer	M8	10
53	TS-1504031	Socket Head Cap Screw	M8*1.25P*16L	2
55	JOSS-S-155	Square Nut	M5*0.8P	1
56	TS-1541041	Nylon Lock Hex Nut	M10*1.5P	3
57	TS-1550071	Flat Washer	10*20*2T	4
58	JOSS-S-158	Link		2
59	JOSS-S-159	Oilite Shaft Bushing		4
60	JOSS-S-160	Link Shaft		1
61	JOSS-S-161	Worm Gear Shaft		1

Index No	Part No	Description	Size	Qty
62	JOSS-S-162	Guide Bar		1
63	JOSS-S-163	Retaining Ring	STW-25	1
64	BB-6205VV	Ball Bearing	6205VV	2
65	JOSS-S-165	Quill		1
66	JOSS-S-166	Worm Gear		1
67	JOSS-S-167	Worm Gear Fitting Bracket		1
68	PM2800-039	Spring Pin	6*25L	2
69	JOSS-S-169	Main Shaft		1
70	JOSS-S-170	Socket Head Cap Screw	M3*0.5P*14L	2
71	JOSS-S-171	Key		1
72	TS-2285101	Phillips Flat Head Screw	M5*0.8P*10L	3
73	JOSS-S-173	Special Nut		1
74	JOSS-S-174	Worm Shaft		1
75	OVS10-050	Spring Pin	6*30L	1
76	JOSS-S-176	Oil Seal	30*62*8T	1
77	JOSS-S-177	Retaining Ring	RTW-62	1
78	JOSS-S-178	Retaining Ring	STW-30	1
79	BB-6206VV	Ball Bearing	6206VV	1
80	JOSS-S-180	Oil Tank		1
81	JOSS-S-181	Oil Sight Glass		1
82	JOSS-S-182	Oil Drain Plug	PT-19, 1/4”	1
83	TS-1490031	Hex Cap Screw	M8*1.25P*20L	4
84	JOSS-S-184	Shaft Coupling		1
85	JOSS-S-185	Stop Bracket		1
86	JOSS-S-186	Warning Label		1
87	TS-1504041	Socket Head Cap Screw	M8*1.25P*20L	4
88	TS-1550031	Flat Washer	5.5*22*2T	2
89	TS-1551031	Lock Washer	M5	2

12.2.1 **JOSS-S Cabinet Assembly – Exploded View**

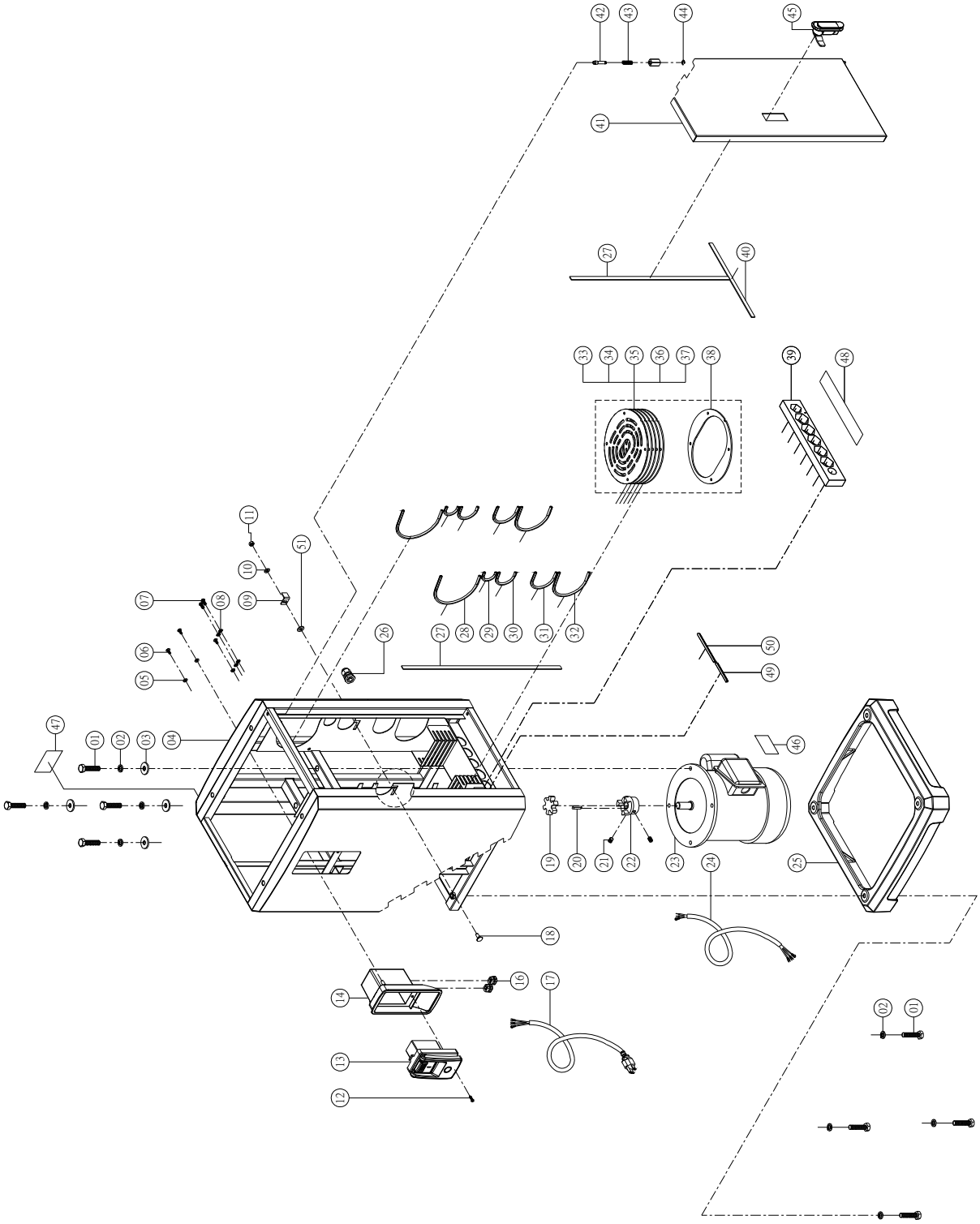

12.2.2 **JOSS-S Cabinet Assembly – Parts List**

Index No.	Part No.	Description	Size	Qty
1	TS-2210451	Hex Cap Screw	M10*1.5P*45L	8
2	TS-2361101	Lock Washer	M10	8
3	5051911	Flat Washer	10*28*3T	4
4	JOSS-S-204	Cabinet		1
5	TS-1550021	Flat Washer	4.3x10x1T	3
6	F011291	Phillips Round Head Tapping Screw	M4*15L	3
7	F001205	Phillips Round Head Screw	M5*0.8P*10L	2
8	JOSS-S-208	Star Washer	M5	4
9	JOSS-S-209	Door Catch		1
10	TS-1550041	Flat Washer	6.5*13*1T	1
11	TS-2311061	Hex Nut	M6*1.0P	1
12	F011291	Phillips Pan Head Tapping Screw	M4*15L	1
13	JOSS-S-213	Switch		1
14	JOSS-S-214	Switch Box		1
16	JOSS-S-216	Strain Relief	SB7R-3	2
17	JOSS-S-217	Power Cord	3x16 AWG	1
18	JOSS-S-218	Carriage Bolt	M6*1.0P*16L	1
19	JOSS-S-219	Coupling Cushion		1
20	JOSS-S-220	Key	5*5*25L	1
21	TS-0270031	Socket Set Screw	5/16"-18UNC*3/8"L	2
22	JOSS-S-222	Motor Coupling		1
23	JOSS-S-223	Motor	1HP, 115/230V, 1Ph	1
24	JOSS-S-224	Motor Cord		1
25	JOSS-S-225	Base		1
26	JOSS-S-226	Strain Relief	PG 9	1
27	JOSS-S-227	Sponge Strip	10*2*470mm	2
28	JOSS-S-228	Edging Strip (for 4” Rubber Drum)		2
29	JOSS-S-229	Edging Strip (for 1” Rubber Drum)		2
30	JOSS-S-230	Edging Strip (for 1-1/2” Rubber Drum)		2
31	JOSS-S-231	Edging Strip (for 2” Rubber Drum)		2
32	JOSS-S-232	Edging Strip (for 3” Rubber Drum)		2
33	JOSS-S-233	Table Insert (for 1/4”~3/4” Spindle)		1
34	JOSS-S-234	Table Insert (for 1”, 1-1/2”, 2” Rubber Drum)		1
35	JOSS-S-235	Table Insert (only for 3/8” spindle at 90 deg.)		1
36	JOSS-S-236	Table Insert (only for 2” Rubber Drum at 90 deg.)		1
37	JOSS-S-237	Table Insert (only for 4” Rubber Drum at 90 deg.)		1
38	JOSS-S-238	Table Insert for 3”, 4” Rubber Drum		1
39	JOSS-S-239	Spindle Seat		1
40	JOSS-S-240	Sponge Strip	10*2*235mm	1
41	JOSS-S-241	Cabinet Door		1
42	JOSS-S-242	Door Pivot		1
43	JOSS-S-243	Compression Spring		1
44	JOSS-S-244	Retainer Ring	ETW-5	1
45	JOSS-S-245	Door Latch		1
46	JOSS-S-246	Motor Label		1
47	JOSS-S-247	ID Label		1
48	JOSS-S-248	Shaft Size Indication Label		1
49	JOSS-S-249	Edging Strip (for 5/8”, 3/4” Shaft)		1
50	JOSS-S-250	Edging Strip (for 1/4”, 3/8”, 1/2” Shaft)		1
51	TS-1550061	Flat Washer	M8	1
	JET-92	JET Logo (not shown)	92x38mm	1

12.3.1 **JOSS-S Spindle and Drum Assembly– Exploded View**

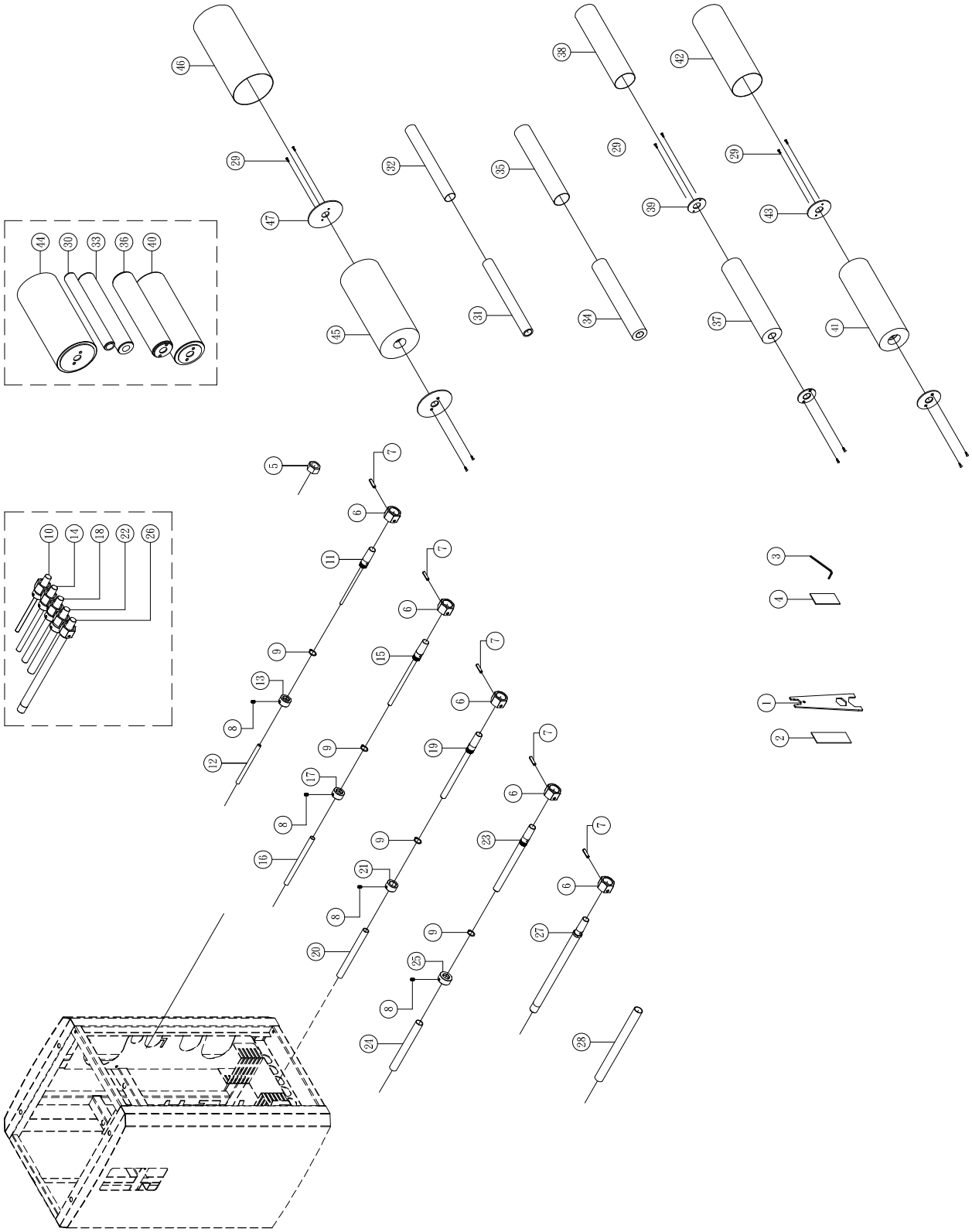

12.3.2 **JOSS-S Spindle and Drum Assembly– Parts List**

Index No.	Part No.	Description	Size	Qty
1	JOSS-S-301	Combination Wrench		1
2	JOSS-S-302	Magnet (Large)		1
3	TS-152704	Hex Wrench	3mm	1
4	JOSS-S-304	Magnet (Small)		1
5	TS-0571082	Hex Nut	3/4”-16UNF	1
6	JOSS-S-306	Special Nut		5
7	JOSS-S-307	Pin	5*25	5
8	TS-2276081	Socket Set Screw	M6*1.0P*8L	4
9	JOSS-S-309	Retaining Ring	STW-17	4
10	JOSS-S-310A	Spindle Assembly (incl. #6, 7, 8, 9, 11, 13 & 100G sleeve)….	1/4”	1
11	JOSS-S-311A	Spindle	1/4”	1
12 *	575891	Sanding Sleeve (60 Grit) – 4 pack	1/4” x 6”	
	575893	Sanding Sleeve (100 Grit) – 4 pack	1/4” x 6”	
	575894	Sanding Sleeve (150 Grit) – 4 pack	1/4” x 6”	
13	JOSS-S-313	Collar (for 1/4” Spindle Assembly)		1
14	JOSS-S-314	Spindle Assembly (incl. #6, 7, 8, 9, 15, 17 & 100G sleeve)….	3/8”	1
15	JOSS-S-315	Spindle	3/8”	1
16	575896	Sanding Sleeve (60 Grit) – 4 pack	3/8” x 6”	
	575898	Sanding Sleeve (100 Grit) – 4 pack	3/8” x 6”	
	575899	Sanding Sleeve (150 Grit) – 4 pack	3/8” x 6”	
17	JOSS-S-317	Collar (for 3/8” Spindle Assembly)		1
18	JOSS-S-318	Spindle Assembly (incl. #6, 7, 8, 9, 19, 21 & 100G sleeve)…	1/2”	1
19	JOSS-S-319	Spindle	1/2”	1
20	575901	Sanding Sleeve (60 Grit) – 4 pack	1/2” x 6”	
	575903	Sanding Sleeve (100 Grit) – 4 pack	1/2” x 6”	
21	JOSS-S-321	Collar (for 1/2” Spindle Assembly)		1
22	JOSS-S-322	Spindle Assembly (incl. #6, 7, 8, 9, 23, 25 & 100G sleeve)….	5/8”	1
23	JOSS-S-323	Spindle	5/8”	1
24	575906	Sanding Sleeve (60 Grit) – 4 pack	5/8” x 6”	
	575908	Sanding Sleeve (100 Grit) – 4 pack	5/8” x 6”	
	575909	Sanding Sleeve (150 Grit) – 4 pack	5/8” x 6”	
25	JOSS-S-325	Collar (for 5/8” Spindle Assembly)		1
26	JOSS-S-326	Spindle Assembly (incl. #6, 7, 27 & 100G sleeve)	3/4”	1
27	JOSS-S-327	Spindle	3/4”	1
28	575911	Sanding Sleeve (60 Grit) – 4 pack	3/4” x 9”	
	575913	Sanding Sleeve (100 Grit) – 4 pack	3/4” x 9”	
	575914	Sanding Sleeve (150 Grit) – 4 pack	3/4” x 9”	
29	JOSS-S-329	Self Tapping Screw	M3*12L	12
30	JOSS-S-330	Drum Assembly (incl. #31 & 100G sleeve)	1”	1
31	JOSS-S-331	Rubber Drum	1”	1
32	575916	Sanding Sleeve (60 Grit) – 4 pack	1” x 9”	
	575918	Sanding Sleeve (100 Grit) – 4 pack	1” x 9”	
	575919	Sanding Sleeve (150 Grit) – 4 pack	1” x 9”	
33	JOSS-S-333	Drum Assembly (incl. #34 & 100G sleeve)	1-1/2”	1
34	JOSS-S-334	Rubber Drum	1-1/2”	1
35	575926	Sanding Sleeve (60 Grit) – 4 pack	1-1/2” x 9”	
	575928	Sanding Sleeve (100 Grit) – 4 pack	1-1/2” x 9”	
	575929	Sanding Sleeve (150 Grit) – 4 pack	1-1/2” x 9”	
36	JOSS-S-336	Drum Assembly (incl.#29, 37, 39, & 100G sleeve)	2”	1
37	JOSS-S-337	Rubber Drum	2”	1
38	575936	Sanding Sleeve (60 Grit) – 4 pack	2” x 9”	
	575938	Sanding Sleeve (100 Grit) – 4 pack	2” x 9’	
	575939	Sanding Sleeve (150 Grit) – 4 pack	2” x 9”	
39	JOSS-S-339	Washer	2”	2
40	JOSS-S-340	Drum Assembly (incl.#29, 41, 43 & 100G sleeve)	3”	1
41	JOSS-S-341	Rubber Drum	3”	1

Index No.	Part No.	Description	Size	Qty
42	575946	Sanding Sleeve (60 Grit) – 4 pack	3” x 9”	
	575948	Sanding Sleeve (100 Grit) – 4 pack	3” x 9”	
	575949	Sanding Sleeve (150 Grit) – 4 pack	3” x 9”	
43	JOSS-S-343	Washer	3”	2
44	JOSS-S-344	Drum Assembly (incl.#29, 45, 47 & 100G sleeve)	4”	1
45	JOSS-S-345	Rubber Drum	4”	1
46	575951	Sanding Sleeve (60 Grit) – 4 pack	4” x 9”	
	575953	Sanding Sleeve (100 Grit) – 4 pack	4” x 9”	
	575954	Sanding Sleeve (150 Grit) – 4 pack	4” x 9”	
47	JOSS-S-347	Washer	4”	2

13.0 **Electrical Connections – JOSS-S Spindle Sander**

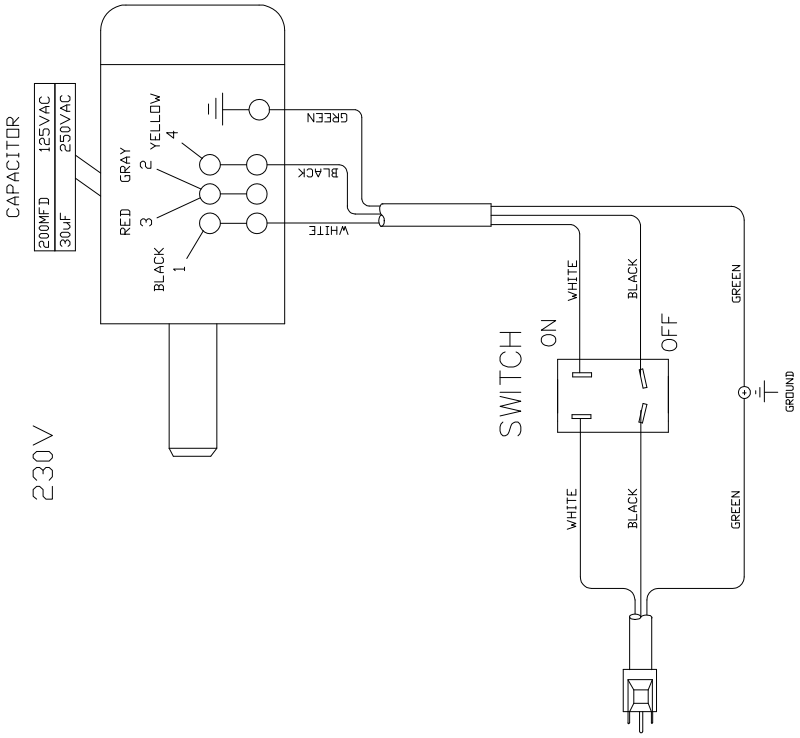

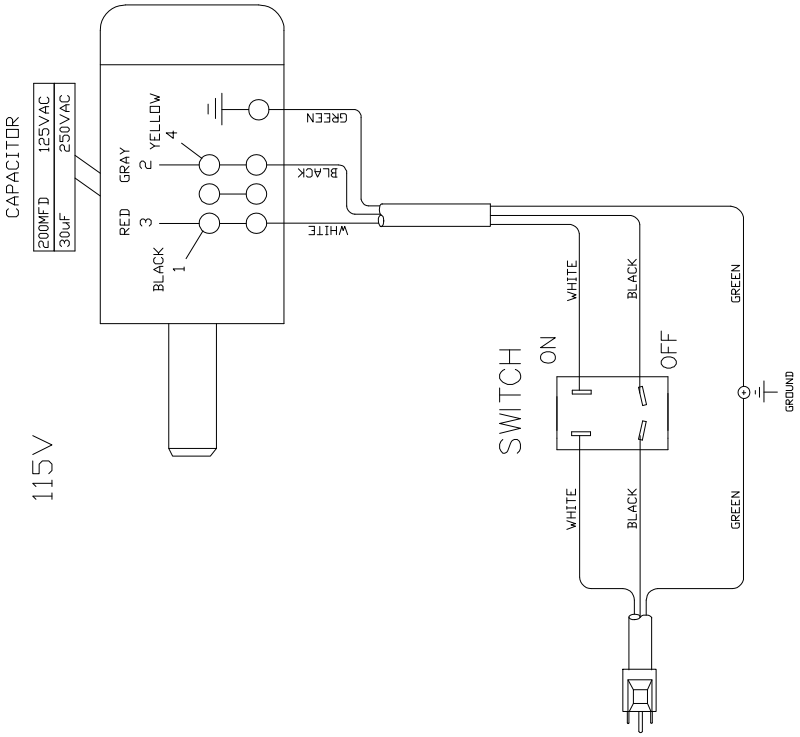

427 New Sanford Road
LaVergne, Tennessee 37086
Phone: 800-274-6848
www.jettools.com